RIGOL

Quick Guide

DS2000 Series Digital Oscilloscope

Mar. 2012

RIGOL Technologies, Inc

Guaranty and Declaration

Copyright

© 2012 RIGOL Technologies, Inc. All Rights Reserved.

Trademark Information

RIGOL is a registered trademark of RIGOL Technologies, Inc.

Publication Number

QGA13101-1110

Notices

- **RIGOL** products are protected by patent law in and outside of P.R.C.
- **RIGOL** reserves the right to modify or change parts of or all the specifications and pricing policies at company's sole decision.
- Information in this publication replaces all previously corresponding materials.
- **RIGOL** shall not be liable for losses caused by either incidental or consequential in connection with the furnishing, use or performance of this manual as well as any information contained.
- Any part of this document is forbidden to be copied or photocopied or rearranged without prior written approval of **RIGOL**.

Product Certification

RIGOL guarantees this product conforms to the national and industrial standards in China. International standard conformance certification is in progress.

Contact Us

If you have any problem or requirement when using our products, please contact RIGOL Technologies, Inc. or your local distributors, or visit: www.rigol.com.

Safety Requirement

General Safety Summary

Please review the following safety precautions carefully before putting the instrument into operation so as to avoid any personal injuries or damages to the instrument and any product connected to it. To prevent potential hazards, please use the instrument only specified by this manual.

Use Proper Power Cord.

Only the power cord designed for the instrument and authorized by local country could be used.

Ground The Instrument.

The instrument is grounded through the Protective Earth lead of the power cord. To avoid electric shock, it is essential to connect the earth terminal of power cord to the Protective Earth terminal before any inputs or outputs.

Connect the Probe Correctly.

Do not connect the ground lead to high voltage since it has the isobaric electric potential as ground.

Observe All Terminal Ratings.

To avoid fire or shock hazard, observe all ratings and markers on the instrument and check your manual for more information about ratings before connecting.

Use Proper Overvoltage Protection.

Make sure that no overvoltage (such as that caused by a thunderstorm) can reach the product, or else the operator might expose to danger of electrical shock.

Do Not Operate Without Covers.

Do not operate the instrument with covers or panels removed.

Use Proper Fuse.

Please use the specified fuses.

Avoid Circuit or Wire Exposure.

Do not touch exposed junctions and components when the unit is powered.

Do Not Operate With Suspected Failures.

If you suspect damage occurs to the instrument, have it inspected by qualified service personnel before further operations. Any maintenance, adjustment or replacement especially to circuits or accessories must be performed by **RIGOL** authorized personnel.

Keep Well Ventilation.

Inadequate ventilation may cause increasing of temperature or damages to the device. So please keep well ventilated and inspect the intake and fan regularly.

Do Not Operate in Wet Conditions.

In order to avoid short circuiting to the interior of the device or electric shock, please do not operate in a humid environment.

Do Not Operate in an Explosive Atmosphere.

In order to avoid damages to the device or personal injuries, it is important to operate the device away from an explosive atmosphere.

Keep Product Surfaces Clean and Dry.

To avoid the influence of dust and/or moisture in air, please keep the surface of device clean and dry.

Electrostatic Prevention.

Operate in an electrostatic discharge protective area environment to avoid damages induced by static discharges. Always ground both the internal and external conductors of the cable to release static before connecting.

Handling Safety

Please handle with care during transportation to avoid damages to buttons, knob interfaces and other parts on the panels.

Safety Terms and Symbols

Terms in this Manual. The following terms may appear in this manual:

WARNING
Warning statements indicate the conditions or practices that could result in injuries or loss of life.

CAUTION
Caution statements indicate the conditions or practices that could result in damage to this product or loss of data.

Terms on the Product. The following terms may appear on the product:

DANGER	indicates an injury or hazard may immediately happen.
WARNING	indicates an injury or hazard may be accessible potentially.
CAUTION	indicates a potential damage to the instrument or other property might occur.

Symbols on the Product. The following symbols may appear on the product:

Hazardous Voltage

Please Refer to Manuals

Protective Earth Terminal

Chassis Ground

Test Ground

Measurement Category

Measurement Category

DS2000 series digital oscilloscopes can make measurements in Measurement Category I.

WARNING

This oscilloscope can only be used for measurements within its specified measurement categories.

Measurement Category Definitions

Measurement category I is for measurements performed on circuits not directly connected to MAINS. Examples are measurements on circuits not derived from MAINS, and specially protected (internal) MAINS derived circuits. In the latter case, transient stresses are variable; for that reason, the transient withstand capability of the equipment is made known to the user.

Measurement category II is for measurements performed on circuits directly connected to the low voltage installation. Examples are measurements on household appliances, portable tools and similar equipment.

Measurement category III is for measurements performed in the building installation. Examples are measurements on distribution boards, circuit-breakers, wiring, including cables, bus-bars, junction boxes, switches, socket-outlets in the fixed installation, and equipment for industrial use and some other equipment, for example. Stationary motors with permanent connection to the fixed installation.

Measurement category IV is for measurements performed at the source of the low-voltage installation. Examples are electricity meters and measurements on primary overcurrent protection devices and ripple control units.

Ventilation Requirement

This oscilloscope uses fan to force cooling. Please make sure that the air intake and exhaust areas are free from obstructions and have free air. When using the oscilloscope in a bench-top or rack setting, provide at least 10 cm clearance beside, above and behind the instrument for adequate ventilation.

WARNING

Inadequate ventilation may cause temperature increase which would damage the instrument. So please keep the instrument well ventilated during operation and inspect the intake and fan regularly.

Working Environment

Temperature

Operating: 0℃ to +50℃

Non-operating: -20℃ to +70℃

Humidity

Under +35℃: ≤90% relative humidity

+35℃ to +40℃: ≤60% relative humidity

WARNING

To avoid short circuit inside the instrument or electric shock, please do not operate in humid environment.

Altitude

Operating: less than 3 km

Non-operating: less than 15 km

Installation (overvoltage) Category

This product is powered by MAINS conforming to installation (overvoltage) category II.

WARNING

Make sure that no overvoltage (such as that caused by thunderbolt) can reach the product, or else the operator might expose to danger of electric shock.

Installation (overvoltage) Category Definitions

Installation (overvoltage) category I refers to signal level which is applicable to equipment measurement terminals connected to the source circuit. In these terminals, precautions are done to limit the transient voltage to the corresponding low level.

Installation (overvoltage) category II refers to the local power distribution level which is applicable to equipment connected to the AC line (AC power).

Pollution Degree

Degree 2

Pollution Degree Definitions

Pollution degree 1: No pollution or only dry, non-conductive pollution occurs. The pollution has no influence. For example: a clean room or air-conditioned office environment.

Pollution degree 2: Normally only dry, non-conductive pollution occurs. Occasionally a temporary conductivity caused by condensation may occur. For example: general indoor environment.

Pollution degree 3: Conductive pollution occurs, or dry, non-conductive pollution occurs which becomes conductive due to condensation which is expected. For example: Sheltered outdoor environment.

Pollution degree 4: Pollution that generates persistent conductivity through conductive dust, rain, or snow. For example: outdoor locations.

Safety Class

Class 1 – Grounded Product

General Care and Cleaning

General Care:

Do not store or leave the instrument in where the instrument will be exposed to direct sunlight for long periods of time.

Cleaning:

Clean the instrument regularly according to its operating conditions. To clean the exterior surface, perform the following steps:

1. Disconnect the instrument from all power sources.
2. Clean the loose dust on the outside of the instrument with a lint- free cloth (with a mild detergent or water). When cleaning the LCD, take care to avoid scarifying it.

CAUTION

To avoid damages to the instrument, do not expose them to liquids which have causticity.

WARNING

To avoid injury resulting from short circuit, make sure the instrument is completely dry before reconnecting to a power source.

Environmental Considerations

The following symbol indicates that this product complies with the applicable European Union requirements according to Directives 2002/96/EC on waste electrical and electronic equipment (WEEE) and batteries.

Product End-of-Life Handling

The equipment may contain substances that could be harmful to the environment or human health. In order to avoid release of such substances into the environment and harm to human health, we encourage you to recycle this product in an appropriate system that will ensure that most of the materials are reused or recycled appropriately. Please contact your local authorities for disposal or recycling information.

Contents

Guaranty and Declaration ..... **I**

Safety Requirement ..... **II**

General Safety Summary II
Safety Terms and Symbols IV
Measurement Category V
Ventilation Requirement VI
Working Environment VII
General Care and Cleaning IX
Environmental Considerations X

Quick Start **1**

General Inspection 1
Appearance and Dimensions 2
To Prepare for Operation 3
To Adjust the Supporting Legs 3
To Connect to AC Power Supply 4
Power-on Inspection 5
To Connect the Probe 6
Function Inspection 7
Probe Compensation 9
Front Panel Overview 10
Rear Panel Overview 11
Front Panel Function Overview 13
VERTICAL 13
HORIZONTAL 14
TRIGGER 15
CLEAR 16
RUN/STOP 16
SINGLE 16
AUTO 16
Knob 17
Navigation Knob 17
MENU 18
Record 19

Print 19
User Interface 20
To Use the Security Lock 24
To Use the Built-in Help System 25

Troubleshooting 26

Quick Start

General Inspection

1. **Inspect the shipping container for damage.**
   Keep the damaged shipping container or cushioning material until the contents of the shipment have been checked for completeness and the instrument has passed both electrical and mechanical tests.

   The consigner or carrier shall be liable for the damage to instrument resulting from shipment. **RIGOL** would not be responsible for free maintenance/rework or replacement of the unit.

2. **Inspect the instrument.**
   In case of any damage, or defect, or failure, notify your **RIGOL** sales representative.

3. **Check the Accessories**
   Please check the accessories according to the packing lists. If the accessories are incomplete or damaged, please contact your **RIGOL** sales representative.

Appearance and Dimensions

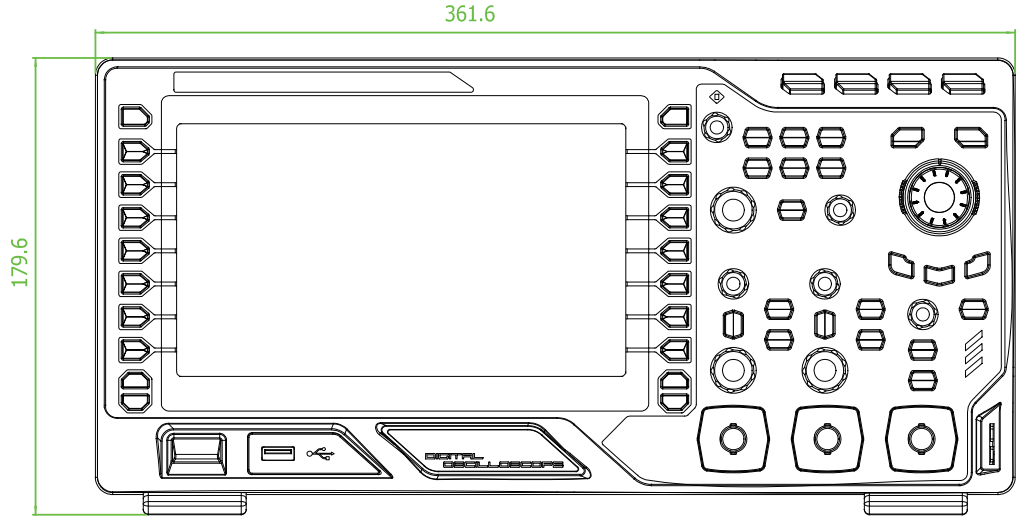

Figure 1 Front View Unit: mm

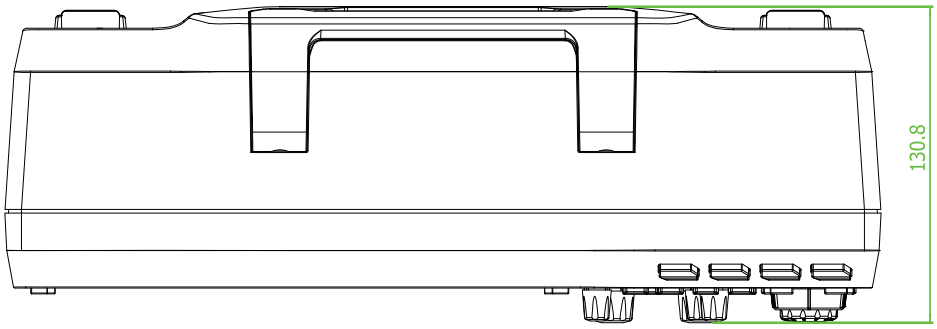

Figure 2 Side View Unit: mm

To Prepare for Operation

To Adjust the Supporting Legs

Adjust the supporting legs properly to use them as stands to tilt the oscilloscope upwards for stable placement of the instrument as well as easier operation and observation of the instrument.

Figure 3 To Adjust the Supporting Legs

To Connect to AC Power Supply

This oscilloscope can accept 100-240 V, 45-440 Hz AC power supply. Please use the power cord supplied with the accessories to connect the oscilloscope to the power source as shown in the figure below. At this point, the oscilloscope is energized and the power key at the lower-left corner of the front panel is in breath state.

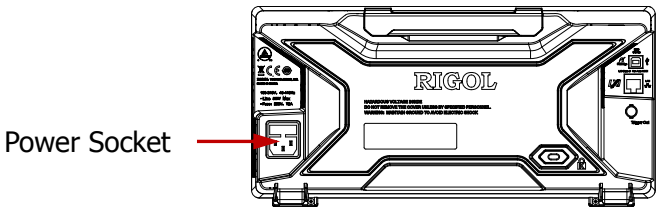

Figure 4 To Connect to AC Power Supply

CAUTION

If the fuse needs to be changed, please return the instrument back to our factory and the **RIGOL** authorized operator will change it for you.

Power-on Inspection

When the oscilloscope is energized, press the power key at the lower-left corner of the front panel to turn on the oscilloscope. During the start-up process, the oscilloscope performs a series of self-test items and you can hear the sound of relay switching. After the self-test, the welcome screen is displayed.

To Connect the Probe

RIGOL provides passive probes for the DS2000 series oscilloscopes. For detailed technical information of the probes, please refer to corresponding Probe User's Guide. The following are the probes recommended for use with this oscilloscope.

Model	Description
RP3300A	300 MHz, passive probe, standard
RP3500A	500 MHz, passive probe, optional

Connect the Probe:

1. Connect the BNC terminal of the probe to a channel BNC connector of the oscilloscope at the front panel.
2. Connect the probe tip to the circuit point under test and connect the ground alligator clip of the probe to the circuit ground terminal.

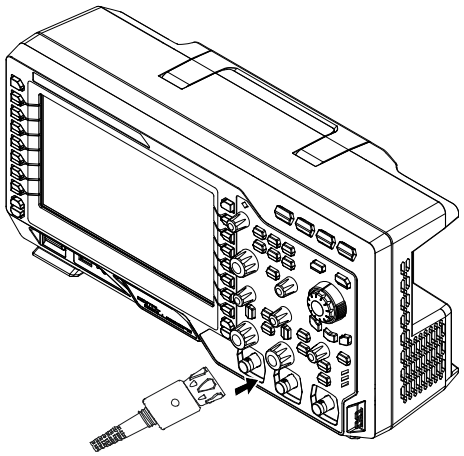

Figure 5 To Connect the Probe

Function Inspection

1. Press **Storage** → **Default** to restore the oscilloscope to its default configuration.
2. Connect the earth alligator clip of the probe to the "Ground Terminal" under the probe compensation signal output terminal.
3. Use the probe to connect the input terminal of CH1 of the oscilloscope and the "Compensation Signal Output Terminal" of the probe.

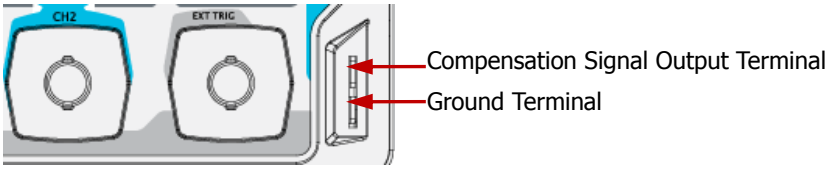

Figure 6 To Use the Compensation Signal

4. Press **AUTO**.
5. Observe the waveform on the display. In normal condition, the display should be a square waveform as shown in the figure below:

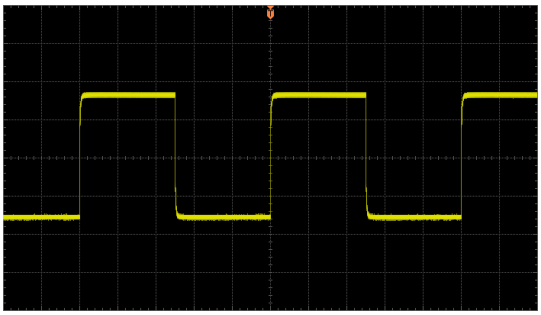

Figure 7 Square Waveform

6. Use the same method to test the other channels. If the square waveforms actually shown do not match that in the figure above, please perform "**Probe Compensation**".

WARNING

To avoid electric shock during the use of probe, please make sure that the insulated wire of the probe is in good condition and do not touch the metallic part of the probe when the probe is connected to high voltage source.

Tip

The signal output from the probe compensation connector can only be used for probe compensation adjustment and can not be used for calibration.

Probe Compensation

When the probes are used for the first time, you should compensate the probes to match the input channels of the oscilloscope. Non-compensated or poorly compensated probes may cause measurement inaccuracy and error. The probe compensation procedures are as follows:

1. Perform step 1, 2, 3 and 4 of **"Function Inspection"**.
2. Check the displayed waveforms and compare them with the following figures.

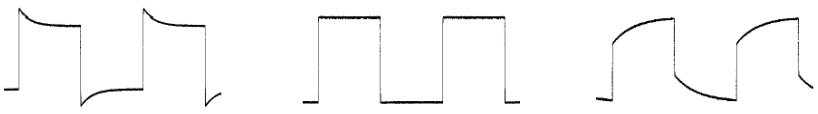

Over compensated Perfectly compensated Under compensated

Figure 8 Probe Compensation

3. Use a nonmetallic driver to adjust the low-frequency compensation adjustment hole on the probe until the displayed waveform is as the "Correctly compensated" in the figure above.

Front Panel Overview

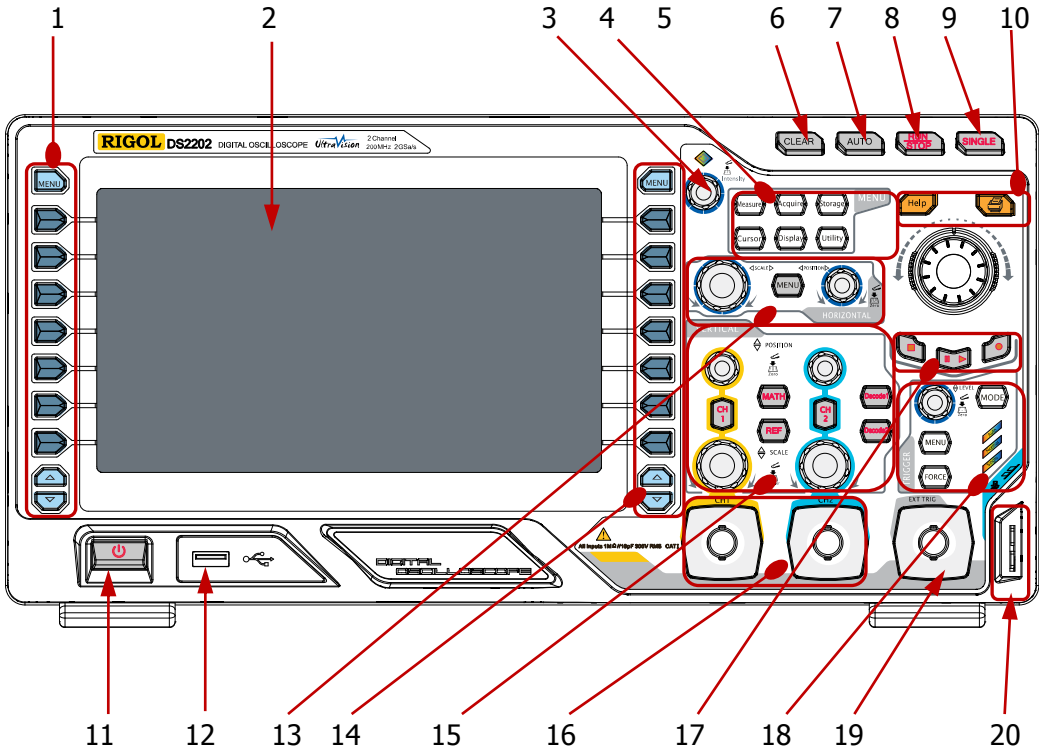

Figure 9 Front Panel Overview

No.	Description	No.	Description
1	MENU	11	Power Key
2	LCD	12	USB HOST Interface
3	Knob	13	HORIZONTAL Control Area
4	Function Menus	14	Function Menu Setting Softkeys
5	Navigation Knob	15	VERTICAL Control Area
6	CLEAR	16	Analog Channel Input Area
7	AUTO	17	Waveform Record/Playback
8	RUN/STOP	18	TRIGGER Control Area
9	SINGLE	19	EXT TRIG Input Terminal
10	Help/Print	20	Probe Compensation Signal Output Terminal/ Ground Terminal

Rear Panel Overview

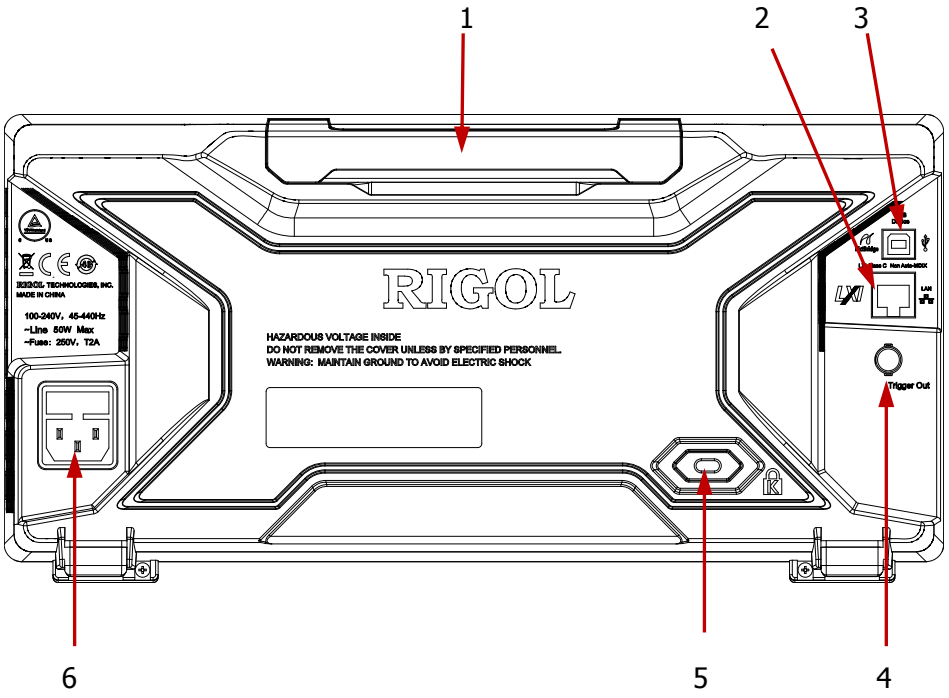

Figure 10 Rear Panel Overview

1. Handle

Pull up the handle vertically for easy carrying of the instrument. When you do not need the handle, press it down.

2. LAN

Connect the instrument to the network via this interface for remote control. This oscilloscope conforms to the LXI-C class instrument standards and can quickly build test system with other instruments.

3. USB DEVICE

PictBridge printer or PC can be connected via this interface to print waveform data or control the instrument using PC software.

4. Trigger Out

The oscilloscope can output a signal that can reflect the current capture rate of the oscilloscope at each trigger via this interface.

5. Lock Hole

You can lock the instrument to a fixed location using the security lock (please buy it yourself) via the lock hole.

6. AC Power Socket

AC power input terminal. The power requirements of this oscilloscope is 100-240 V, 45-440 Hz, CAT II. Use the power cord provided with the accessories to connect the instrument to AC power. Then, you can press the power key at the front panel to start the instrument.

Front Panel Function Overview

VERTICAL

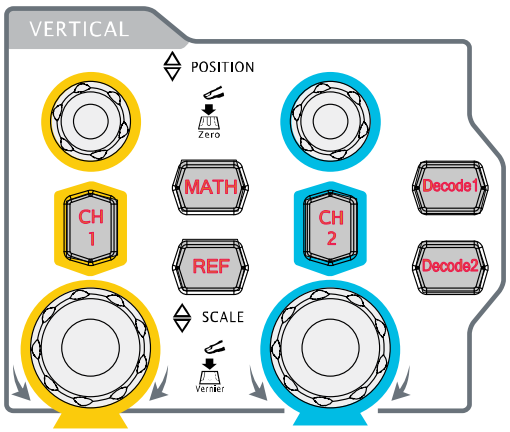

CH1, **CH2**: analog input channels. The two channels are marked by different colors which are also used to mark both the waveforms on the screen and the channel input connectors. Press any key to open the corresponding channel menu and press again to turn off the channel.

MATH: press this key to open the math operation menu under which to perform add, subtract, multiply, divide, FFT, logic and advanced operation.

REF: press this key to enable the reference waveform function to compare the waveform actually tested with the reference waveform to decide circuit failures.

VERTICAL **POSITION**: modify the vertical position of the current channel waveform. Turn clockwise to increase the position and turn counterclockwise to decrease. During the modification, the waveform would move up and down and the position message (e.g.

) at the lower-left corner of the screen would change accordingly. Press down this knob to quickly reset the vertical position.

VERTICAL **SCALE**: modify the vertical scale of the current channel. Turn clockwise to decrease the scale and turn counterclockwise to increase. During the modification, the amplitude of the waveform would enlarge or reduce and the scale information (e.g.

) at the lower side of the screen would change accordingly. Press down this knob to quickly switch the vertical scale adjustment modes between "Coarse" and "Fine".

Decode1 and **Decode2**: decoding function keys. Press the corresponding key to open the decoding function menu. DS2000 supports parallel decoding and protocol decoding.

HORIZONTAL

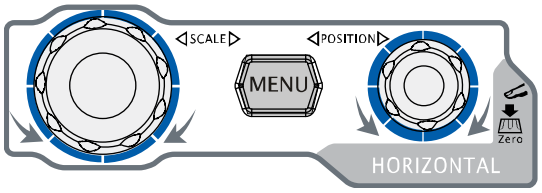

MENU: press this key to open the horizontal control menu under which to turn on or off the delayed sweep function, switch between different time base modes, switch between "Coarse" and "Fine" adjustment of scale as well as modify the horizontal reference setting.

HORIZONTAL **SCALE**: modify the horizontal time base. Turn clockwise to reduce the time base and turn counterclockwise to increase the time base. During the modification, waveforms of all the channels will be displayed in expanded or compressed mode and the time base message (e.g.

) at the upper side of the screen would change accordingly. Press down this knob to quickly switch to delayed sweep state.

HORIZONTAL **POSITION**: modify the trigger position. The trigger point would move left or right relative to the center of the screen when you turn the knob. During the modification, waveforms of all the channels would move left or right and the trigger position message (e.g.

) at the upper-right corner of the screen would change accordingly. Press down this knob to quickly reset the trigger position (or the delayed sweep position).

TRIGGER

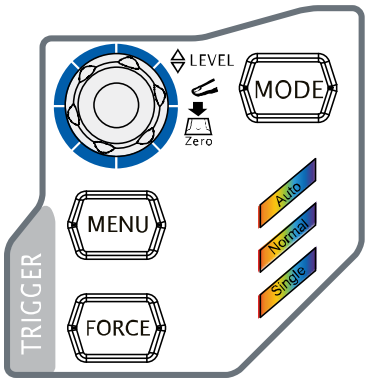

MODE: press this key to switch the trigger mode to **Auto**, **Normal** or **Single** and the corresponding state backlight of the current trigger mode would be illuminated.

TRIGGER **LEVEL**: modify the trigger level. Turn clockwise to increase the level and turn counterclockwise to reduce the level. During the modification, the trigger level line would move up and down and the value in the trigger level message box (e.g.

) at the lower-left corner of the screen would change accordingly. Press down the knob to quickly reset the trigger level to zero point.

MENU: press this key to open the trigger operation menu. This oscilloscope provides various trigger types.

FORCE: in **Normal** and **Single** trigger modes, press this key to generate a trigger signal forcefully.

CLEAR

Press this key to clear all the waveforms on the screen. If the oscilloscope is in "RUN" state, new waveforms will still be displayed.

RUN/STOP

Press this key to set the state of the oscilloscope to "RUN" or "STOP".
In "RUN" state, the key is illuminated in yellow.
In "STOP" state, the key is illuminated in red.

SINGLE

Press this key to set the trigger mode to "Single". In single trigger mode, press **FORCE** to generate a trigger signal immediately.

AUTO

Press this key to enable the waveform auto setting function. The oscilloscope will automatically adjust the vertical scale, horizontal time base and trigger mode according to the input signal to realize optimum waveform display. Note: auto setting requires that the frequency of the signal under test should be no lower than 50 Hz, the duty cycle be greater than 1% and the amplitude be at least 20 mVpp. If the parameters exceed these limits, "Auto failed !" would be displayed after pressing this key and the quick parameter measurement menu might not be displayed.

Knob

Adjust waveform brightness:
In non-menu-operation mode (menu is hidden), turn this knob to adjust the brightness of waveform display. The adjustable range is from 0% to 100%. Turn clockwise to increase the brightness and counterclockwise to reduce. Press down this knob to reset the brightness to 50%. You can also press **Display** → **WaveIntensity** and use the knob to adjust the waveform brightness.

Multifunctional Knob (the backlight goes on during operation):
In menu operation, press any menu softkey and turn the knob to select the submenus under this menu and then press down the knob to select the current submenu. It can also be used to modify parameters and input filename.

Navigation Knob

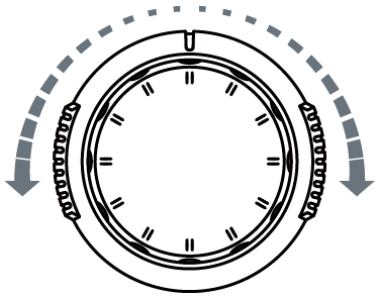

This knob provides quick Adjust/Locate function for numerical parameters with relatively large settable range. Turn clockwise (counterclockwise) to increase (reduce) the value. The inner knob is used for fine adjustment and the outer knob for coarse adjustment.

For example, this knob can be used to quickly locate the waveform frame ("Current Frame" menu) to be played back in the waveform playback function. Similar menus include trigger holdoff, pulse width setting, slope time etc.

MENU

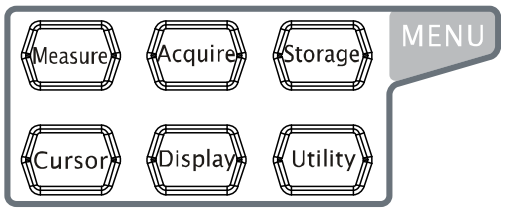

Measure: press this key to open the measurement setting menu. You can set the measurement setting, all measure, statistic function etc.

Press **MENU** at the left of the screen to open the measurement menus of 22 waveform parameters. Then, press down the corresponding menu softkey to quickly realize one-key measurement and the measurement result will be displayed at the bottom of the screen.

Acquire: press this key to enter the sample setting menu to set the acquisition mode, memory depth and antialiasing function of the oscilloscope.

Storage: press this key to enter file store and recall interface. The storable file types include traces, waveforms, setups, picture and CSV. Internal and external storage as well as disk management are also supported.

Cursor: press this key to enter cursor measurement menu. The oscilloscope provides three cursor modes: manual, track and auto.

Display: press this key to enter display setting menu to set the display type, persistence time, wave intensity, grid type, grid brightness and menu display time of the waveform.

Utility: press this key to enter the system function setting menu to set the system-related functions or parameters, such as I/O setting, sound and language. Besides, some advanced functions (such as pass/fail test, waveform record and print setting) are also supported.

Record

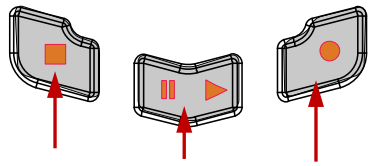

Record: press this key to start recording the waveform. The backlight is illuminated in red. Besides, when record constant on (Open) is enabled, the backlight will also be illuminated.

Play/Pause: in stop or pause state, press this key to play back the waveform and press again to pause the play. The backlight is illuminated in yellow.

Stop: press this key to stop the waveform being recorded or being played back. The backlight is illuminated in orange.

Print

Press this key to execute the print function or save the screen in the USB storage device. If a PictBridge printer is currently connected and the printer is in idle state, pressing this key will execute the print function. If no printer but an USB storage device is currently connected, pressing this key will save the screen to the USB storage device in ".bmp" format. When printer and USB storage device are connected at the same time, the printer enjoys higher priority.

User Interface

DS2000 provides 8.0 inches, WVGA (800*480) 160,000 color TFT LCD. What is worth mentioning is that the 14-grid ultra-wide screen enables you to view "longer" waveform.

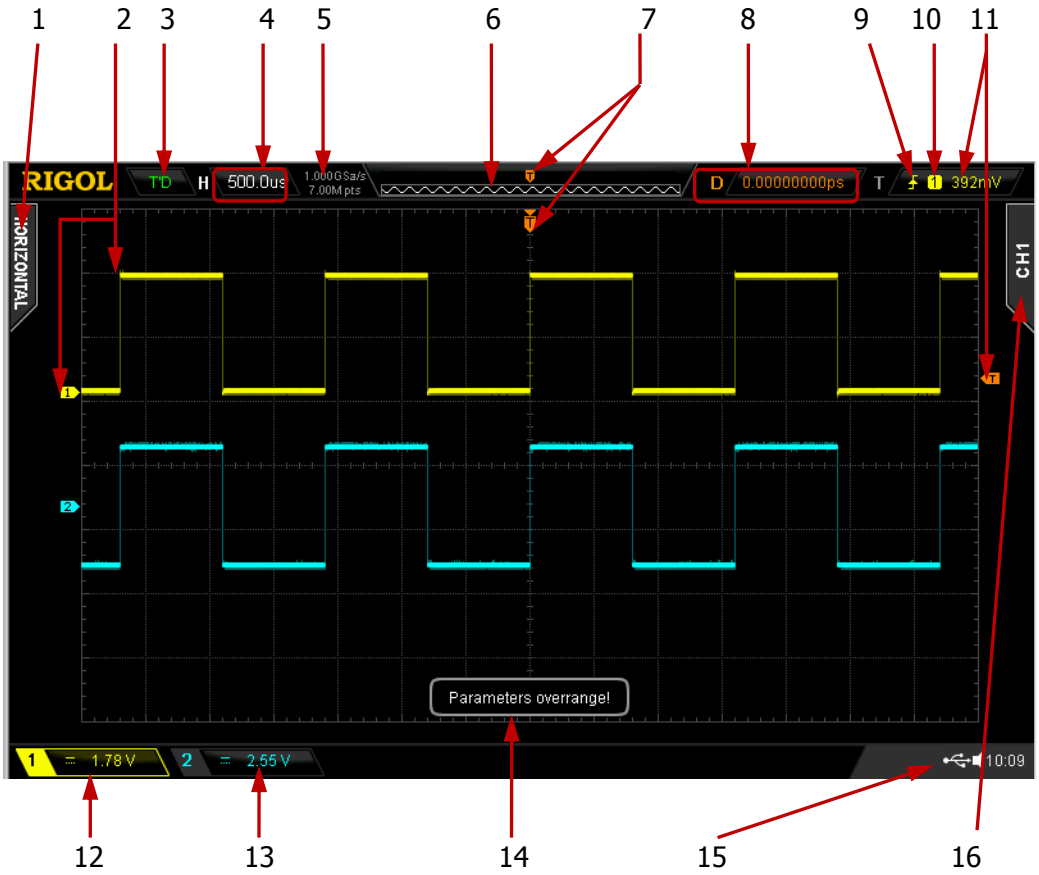

Figure 11 User Interface

1. **Auto Measurement Items**
   Provide 12 horizontal (HORIZONTAL) and 10 vertical (VERTICAL) measurement parameters. Press the softkey at the left of the screen to activate the corresponding measurement item.

2. **Channel Label/Waveform**
   Different channels are marked by different colors and the color of the

waveform complies with the color of the channel.

3. **Status**

   Available states include RUN, STOP, T'D (triggered), WAIT and AUTO.

4. **Horizontal Time Base**

   - Represent the time per grid on the horizontal axis on the screen.
   - Use **HORIZONTAL** **SCALE** to modify this parameter. The range available is from 2 ns to 50 s.

5. **Sample Rate/Memory Depth**

   - Display the current sample rate and memory depth of the oscilloscope.
   - Use **HORIZONTAL** **SCALE** to modify this parameter.

6. **Waveform Memory**

   Provide the schematic diagram of the memory position of the waveform currently on the screen.

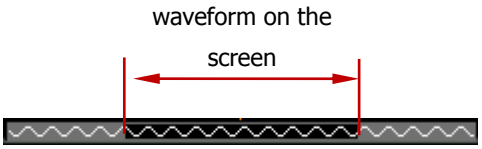

7. **Trigger Position**

   Display the trigger position of the waveform in the waveform memory and on the screen.

8. **Trigger Position**

   Use **HORIZONTAL** **POSITION** to modify this parameter. Press down the knob to automatically set the parameter to zero.

9. **Trigger Type**

   Display the currently selected trigger type and trigger condition setting. Different labels are displayed when different trigger types are selected. For example: represents triggering on the rising edge in "Edge" trigger.

10. **Trigger Source**

    Display the trigger source currently selected (CH1,CH2, EXT, or AC Line). Different labels are displayed when different trigger sources are selected and the color of the trigger parameter area will change accordingly. For example: 1 denotes that CH1 is selected as the trigger source.

11. Trigger Level

- T at the right of the screen is the trigger level label and the trigger level value is displayed at the upper-right corner of the screen.
- When using **TRIGGER** **LEVEL** to modify the trigger level, the trigger level value will change with the up and down of T.

Note: in slope trigger, runt trigger and windows trigger, there are two trigger level labels (T1 and T2).

12. CH1 Vertical Scale

- Display the voltage value per grid of CH1 waveform vertically.
- Use **VIRTICAL** **SCALE** to modify this parameter.
- The following labels will be displayed according to the current channel setting: channel coupling (e.g. ⎓) and bandwidth limit (e.g. B).

13. CH2 Vertical Scale

- Display the voltage value per grid of CH2 waveform vertically.
- Use **VIRTICAL** **SCALE** to modify this parameter.
- The following labels will be displayed according to the current channel setting: channel coupling (e.g. ⎓) and bandwidth limit (e.g. B).

14. Message Box

Display prompt messages.

15. Notification Area

Display system time, sound icon and USB storage device icon.

- System Time: displayed in "hh:mm (hour:minute)" format. When printing or storing the waveform, the output file will contain this time message. Press **Utility** → **System** → **System Time** to set through the following format:
  yyyy-mm-dd hh-mm-ss
  (year-month-date hour-minute-second)
- Sound Icon: when sound is enabled, 🔊 will be displayed. Press **Utility** → **Sound** to enable or disable the sound.
- USB Storage device Icon: when an USB storage device is detected, ⇆ will be displayed.

16. Operation MENU

Press any softkey to activate the corresponding menu. The following symbols might be displayed in the menu:

Denote that ↻ at the front panel can be used to select parameter items. The backlight of ↻ turns on when parameter selection is valid.

Denote that ↻ can be used to modify parameter values. The backlight of ↻ turns on when parameter input is valid.

Denote that you can use the **Navigation Knob** to quickly adjust/locate parameters.

Denote that you can use ↻ to adjust the parameter and then press down ↻ to select the parameter.

Denote that the current menu has several options.

Denote that the current menu has a lower level menu.

Press this key to return to the previous menu.

Note: the following direction keys might appear in the grid at the lower-left corner of the menu bar:

Denote that you can open the next page menu.

Denote that you can open the previous page menu.

To Use the Security Lock

If needed, you can use the security lock (please buy it yourself) to lock the oscilloscope to a fixed location. The method is as follows, align the lock with the lock hole and plug it into the lock hole vertically, turn the key clockwise to lock the oscilloscope and then pull the key out.

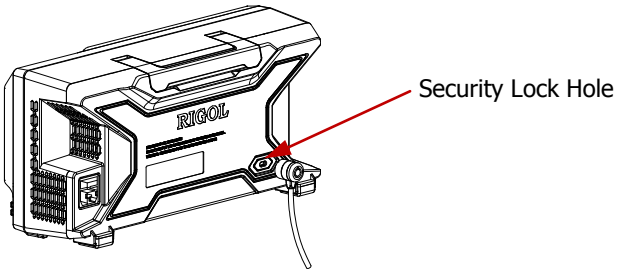

Figure 12 To Use the Security Lock

To Use the Built-in Help System

The help system of this oscilloscope provides instructions for all the function keys (including menu keys) at the front panel. Press **Help** to open the help interface and press again to close the interface. The help interface mainly consists of two parts. The left is "Help Options" and you can use "Button" or "Index" mode to select. The right is "Help Display Area".

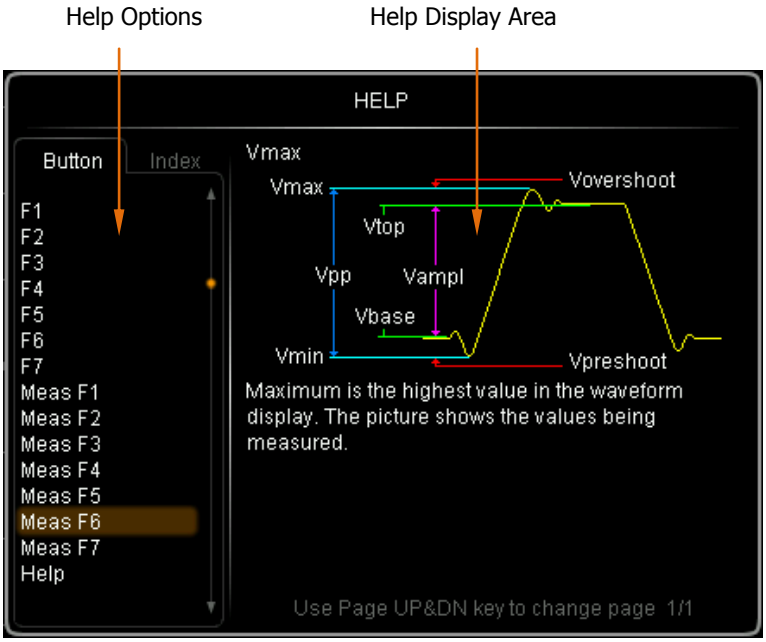

Figure 13 Help Information

Button:

Default mode. In this mode, you can press the button (except the power key , the knob ↺ and the menu page up/down key ⏶/⏷) or rotate the navigation knob at the front panel directly to get the corresponding help information in the "Help Display Area".

Use ↺ to select "To Index" and then press the knob to switch to **Index** mode.

Index:

In this mode, use ↺ to select the item that needs to get help (for example, "Band Width"). The item currently selected is displayed in brown. Press the knob to get the corresponding help information in the "Help Display Area".

Use ↺ to select "To Button" and then press the knob to switch to **Button** mode.

Troubleshooting

The commonly encountered failures and their solutions are listed below. When you encounter those failures, please solve them following the corresponding steps. If the problem remains still, please contact **RIGOL** and provide your device information (acquisition method: **Utility** → **System** → **System Info**).

1. **The screen is still dark (no display) after power on:**
   (1) Check if the power is correctly connected.
   (2) Check if the fuse is burned out. If the fuse needs to be changed, please return the instrument back to the factory and the **RIGOL** authorized personnel will change the fuse for you.
   (3) Restart the instrument after finishing the above inspections.
   (4) If it still does not work correctly, please contact **RIGOL**.

2. **The signal is sampled but no waveform of the signal is displayed:**
   (1) Check if the probe is correctly connected to the signal connecting wire.
   (2) Check if the signal connecting wire is correctly connected to the BNC (namely channel connector).
   (3) Check if the probe is correctly connected to the item under tested.
   (4) Check if there are signals generated from the item under test (you can connect the probe compensation signal to the problematic channel to determine which has problems, the channel or the item under test).
   (5) Resample the signal.

3. **The voltage amplitude measured is greater or lower than the actual value (note that this failure usually only occurs when probe is used):**
   Check whether the attenuation coefficient of the channel complies with the attenuation ratio of the probe.

4. **There is waveform display but not stable:**
   (1) Check the trigger signal source: check whether the **Source** item at the trigger panel complies with the signal channel actually used.
   (2) Check the trigger type: general signals should use "Edge" trigger and video signal should use "Video" trigger. Only when the proper trigger type is used, can the waveform be displayed stably.

(3) Change the trigger holdoff setting.

5. No display after pressing RUN/STOP:

Check if the **MODE** at the trigger panel (TRIGGER) is on "Normal" or "Single" and if the trigger level exceeds the waveform range. If yes, set the trigger level to the middle or set the **MODE** to "Auto".

Note: using **AUTO** could automatically finish the above setting.

6. The display of waveform is ladder-like:

(1) The horizontal time base might be too low. Increase the horizontal time base to increase the horizontal resolution and improve the display.

(2) If **Type** is "Vectors", the lines between the sample points may cause ladder-like display. Set **Type** to "Dots" to solve the problem.

7. Fail to connect PC or PictBridge through USB:

Check the **IO Setting** menu in **Utility** to make sure whether the setting in **USB Device** matches the device currently connected. If needed, restart the oscilloscope.

8. The USB storage device can not be recognized:

(1) Check if the USB storage device can work normally.

(2) Make sure that the USB storage device being used is flash type. This oscilloscope does not support hardware type USB storage device.

(3) Make sure if the capacity of the USB storage device is too large. It is recommended that the capacity of the USB storage device being used with this oscilloscope is no larger than 8 GBytes.

(4) Restart the instrument and then insert the USB storage device to check it.

(5) If the USB storage device still can not be used normally, please contact **RIGOL**.